Specification of the marking roll/segments

1. Typefaces

- The standard typeface is based on DIN 1451
  (Other typefaces available on request)
- A .dxf file is needed for logos and special characters

2. Possible marking types | drives

- In the standard version the drive is positioned on the centre of the marking roll/marking segment
- On request, the drive, which can be custom designed (logo, backslash, asterisks, number signs, etc.), can be applied to the side of the characters and removed afterwards by reworking (cutting off, finish machining, bevelling, etc.)

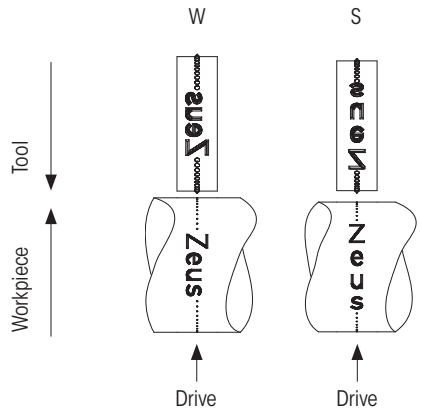

3. Character height/ embossing depth

- The standard flank angle is 90°
  (Other flank angles available on request)
- Minimum character height: 0.8 mm
- Maximum character height: Segment width – 1 mm
  (Example: max. character height = 6 mm – 1 mm = 5 mm)
- The character height is measured on the offset (see figure below)
- Standard embossing depth: 0.35 mm

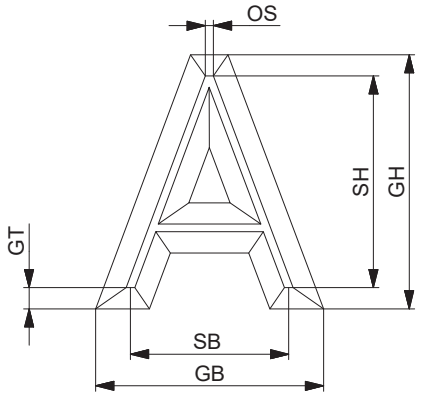

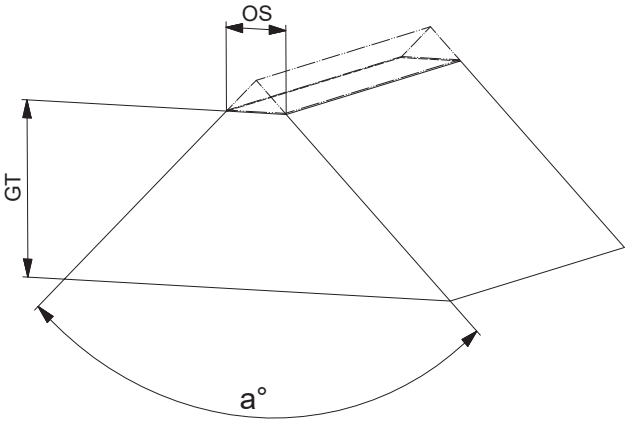

a° = flank angle
GT = embossing depth
GB = embossing width
GH = embossing height
SB = character width
SH = character height
OS = offset

①

4. Diameter ratio: Roll/segments – workpiece

- The diameter of the marking roll/segments is **independent** of the workpiece diameter

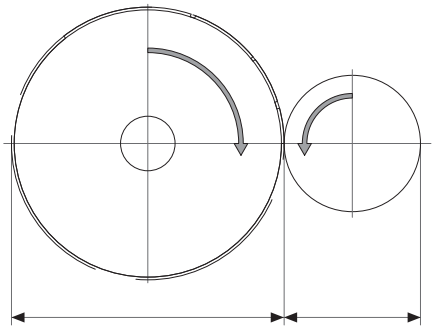

Marking segment Ø:
i = n : m

Practical guidance

1. Preparation of workpiece

- The surface must be clean
- Perfect concentricity is essential (0.03 mm)

2. Impression depth

- The standard impression depth is 0.075 mm relative to the radius/ 0.15 mm relative to the diameter
- Impression depths exceeding the recommended maximum values may cause character distortions

3. Marking as part of the machining process

- The position of the drive on the workpiece should be taken into account during the machining process
- There is a danger that weak parts of the workpiece are deformed during marking. We recommend marking to be carried out on the strong parts of the workpiece and/or before the critical machining steps

RSVP Tooling, Inc. • Toll Free 888-289-7787 • Direct 815-725-3310 • Fax 815-725-3391 • Email sales@rsvptooling.com • www.rsvptooling.com